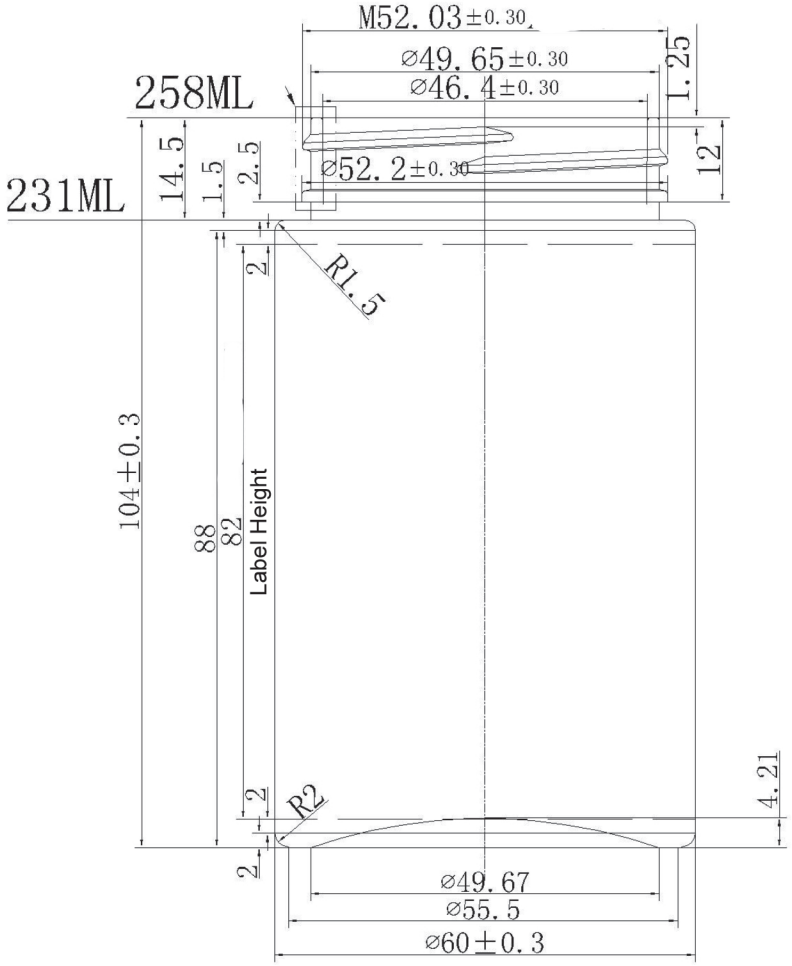

Cavity No.

				60 dram 53mm Special H PET Child Resistant Straight Sided Jar
			22g	
				cannasupplies a division of PharmaSystems Inc.